ITEM NO.	DESCRIPTION	QTY.
1	FLASHING, .040" X 12" X 7.5", SHEET, 5052-H32, MILL	1
2	TILE REPLACEMENT BASE, 8.125", 6061-T6, MILL	1
3	WASHER, SEALING, 5/16" ID X 3/4" OD, EPDM BONDED SS	2
4	LAG SCREW, GRK RSS WASHER HEAD, 5/16" X 4", T-30, STEEL, CLIMATEK COATED	2

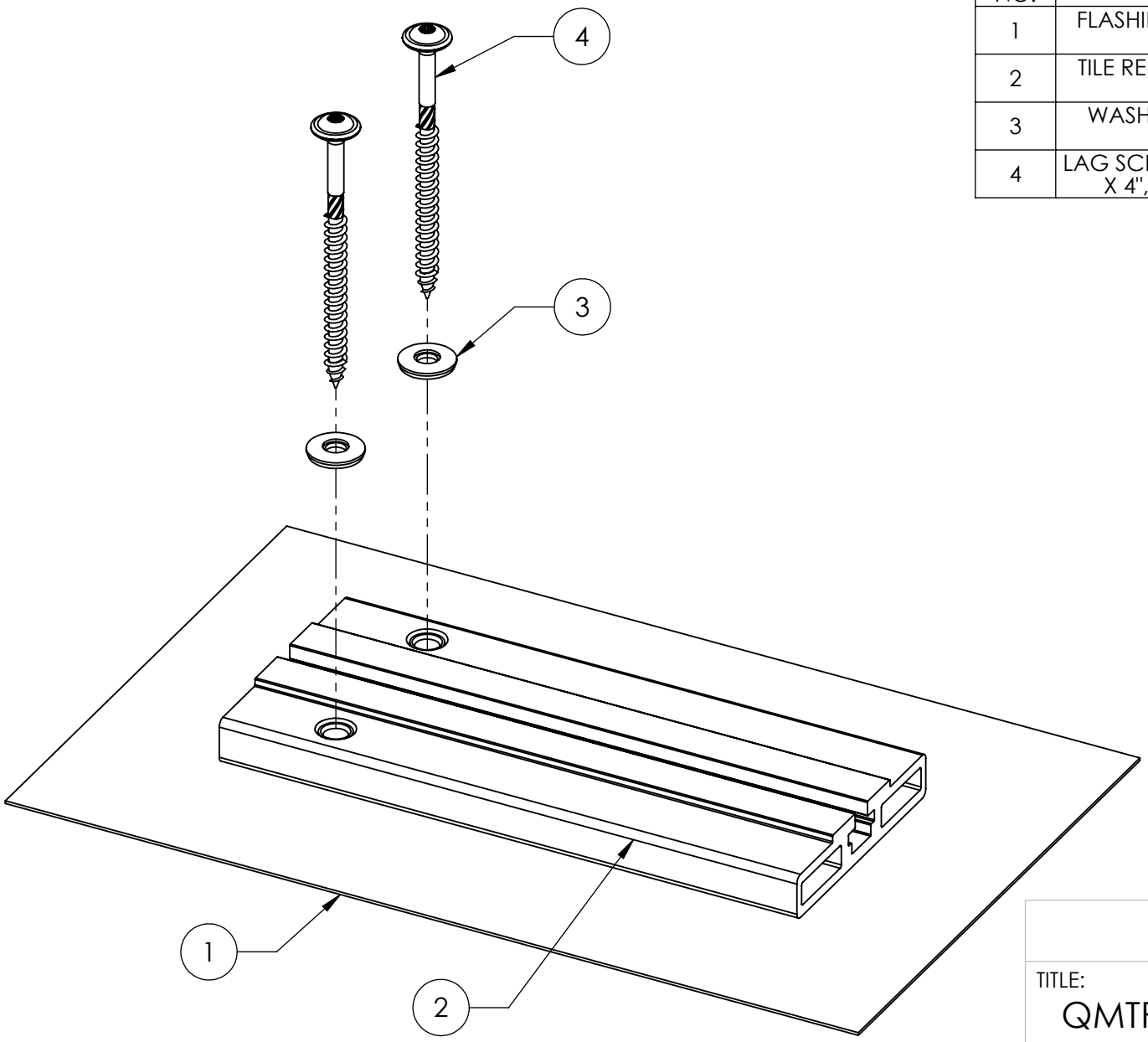

Quick Mount PV

TITLE:

QMTR-BM: TILE REPLACEMENT, BASE MOUNT

UNLESS OTHERWISE SPECIFIED:
DIMENSIONS ARE IN INCHES
TOLERANCES:
FRACTIONAL ± 1/8
TWO PLACE DECIMAL ±.19
THREE PLACE DECIMAL ±.094

SIZE	DRAWN BY: RAD	REV
A	DATE: 9/23/2016	4
SCALE: 1:2	WEIGHT: 2.07	SHEET 1 OF 2

DO NOT SCALE DRAWING

PROPRIETARY AND CONFIDENTIAL
THE INFORMATION CONTAINED IN THIS DRAWING IS THE SOLE PROPERTY OF QUICK MOUNT PV. ANY REPRODUCTION IN PART OR AS A WHOLE WITHOUT THE WRITTEN PERMISSION OF QUICK MOUNT PV IS PROHIBITED. **COPYRIGHT © 2016 QUICK MOUNT PV**

5 4 3 2 1

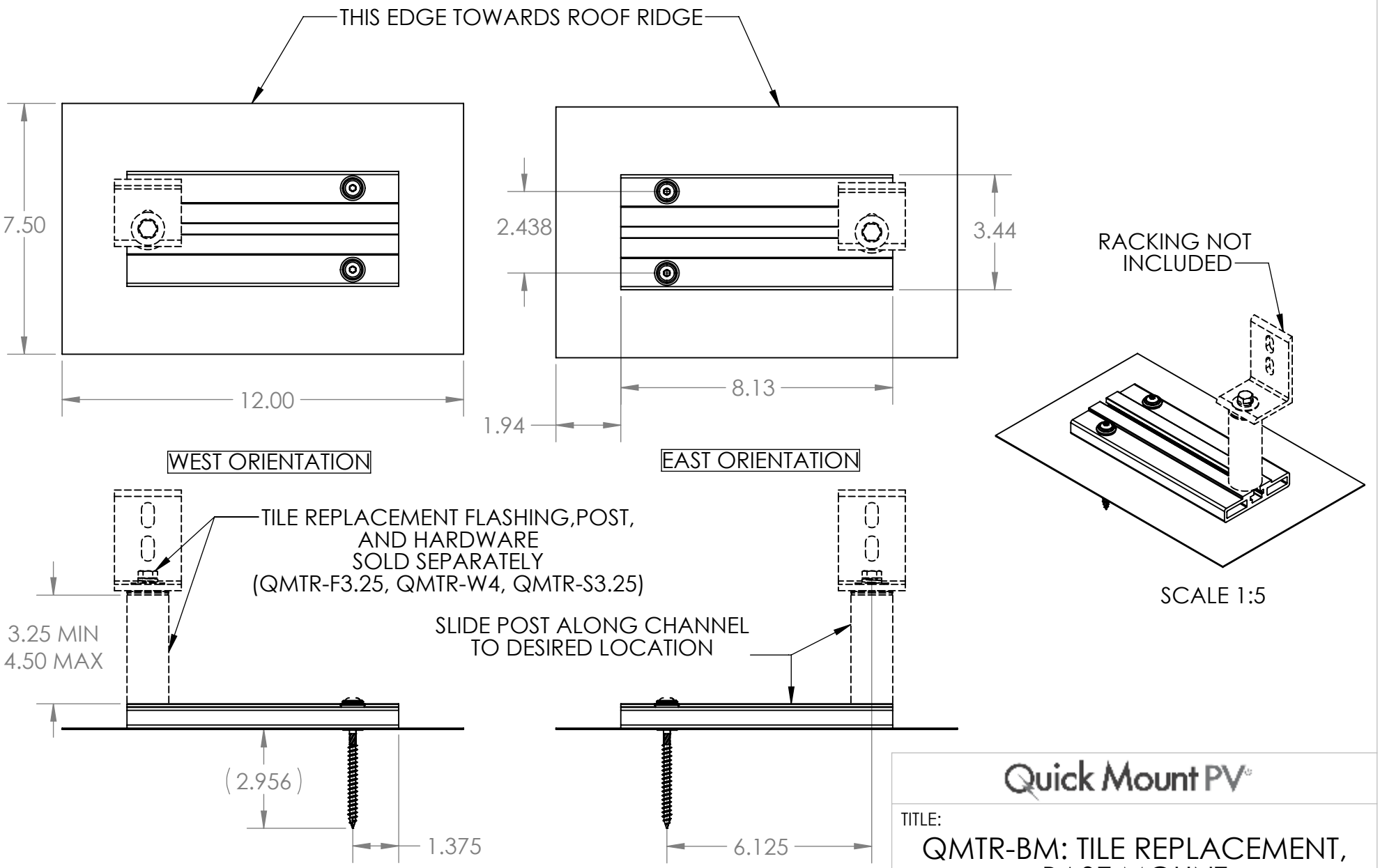

Quick Mount PV

TITLE:

QMTR-BM: TILE REPLACEMENT, BASE MOUNT

UNLESS OTHERWISE SPECIFIED:	SIZE	DRAWN BY: RAD	REV
DIMENSIONS ARE IN INCHES TOLERANCES: FRACTIONAL ± 1/8 TWO PLACE DECIMAL ±.19 THREE PLACE DECIMAL ±.094	A	DATE: 9/23/2016	4
	SCALE: 1:4	WEIGHT: 2.07	SHEET 2 OF 2

PROPRIETARY AND CONFIDENTIAL
THE INFORMATION CONTAINED IN THIS DRAWING IS THE SOLE PROPERTY OF QUICK MOUNT PV. ANY REPRODUCTION IN PART OR AS A WHOLE WITHOUT THE WRITTEN PERMISSION OF QUICK MOUNT PV IS PROHIBITED. **COPYRIGHT © 2016 QUICK MOUNT PV**

DO NOT SCALE DRAWING

5 4 3 2 1